THE HONG KONG POLYTECHNIC UNIVERSITY
香港理工大學

DEPARTMENT OF APPLIED MATHEMATICS
應 用 數 學 系

Professor Lin Yan-ping

Research interests include:

- Numerical Analysis
- Partial Differential Equation

On-going GRF project

Highly Accurate Immersed Element Methods and Simulation Techniques for Interface Problems

This proposal concerns the development, analysis, implementation, and application of efficient numerical methods for interface problems. These are characterized by the presence of discontinuities and /or singularities on surfaces, which may be moving or stationary, due to abrupt changes in materials or build up of charges or other effects. The focus will be mainly on the immersed finite element/finite volume methods and computation on uniform grids (with possibly local refinements) since such high order elements will definitely produce very accurate numerical solutions. These will in turn generate better resolutions for the interfaces and allow a better understanding of the physical phenomena associated with moving or stationary interfaces.

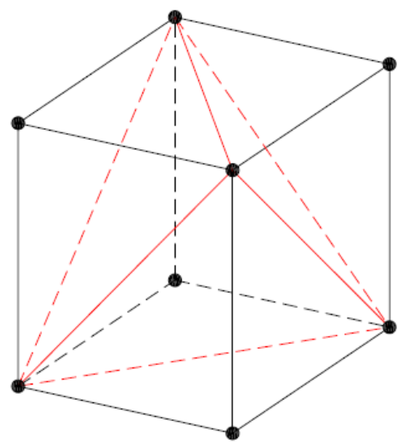

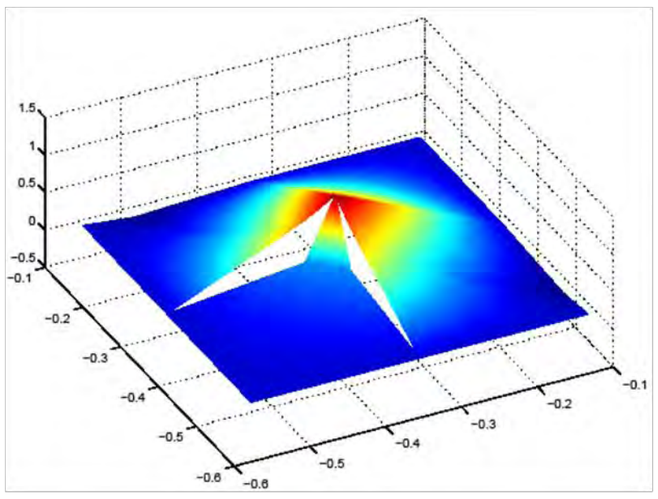
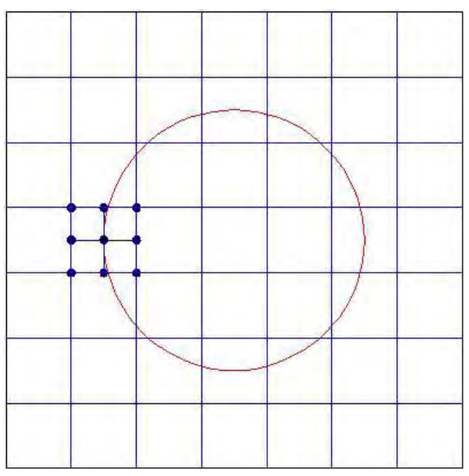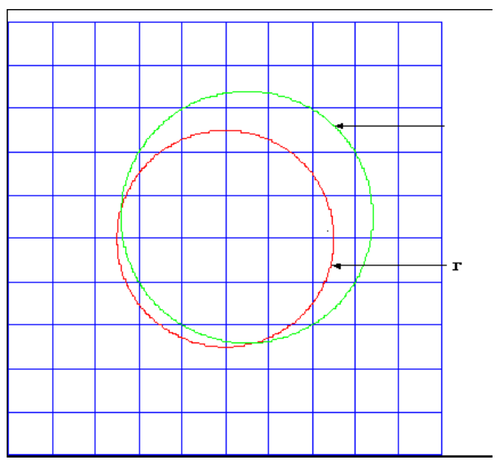
Applications vary from problems in financial option pricing, material science to questions arising in biology, e.g.: study of blood flow in flexible tubes; of cell dynamics and motility; and of tumor growth and cancer modeling.